Fire damper

Type FK-EU ODA and FKR-EU ODA with thermal insulation

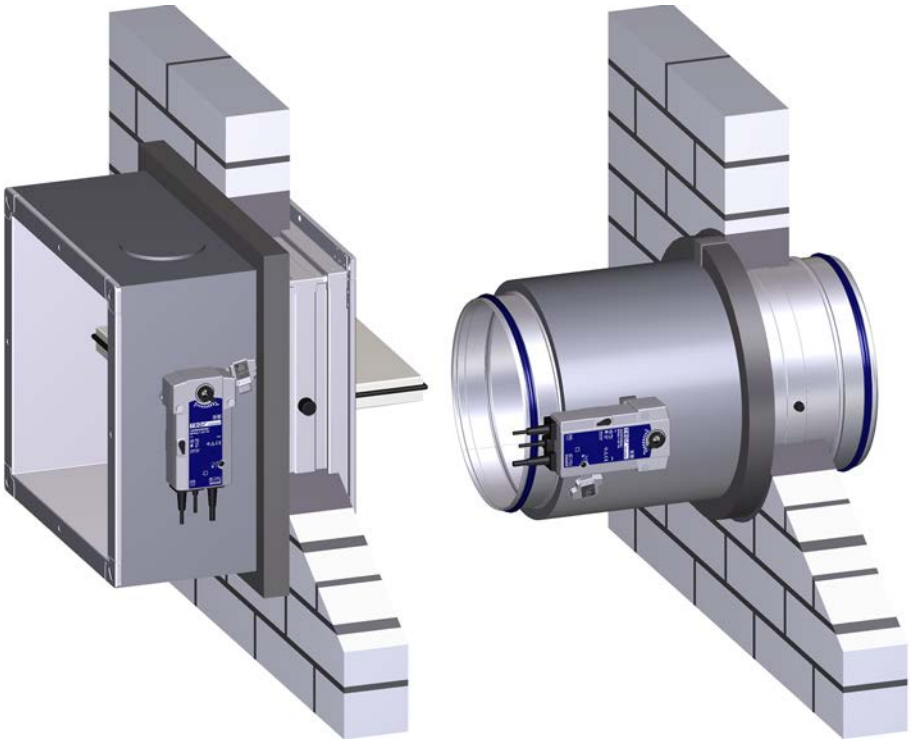

Read the instructions prior to performing any task!

TROX® TECHNIK

The art of handling air

TROX GmbH
Heinrich-Trox-Platz
47504 Neukirchen-Vluyn
Germany
Phone: +49 (0) 2845 2020
Fax: +49 (0) 2845 202-265
E-mail: trox@trox.de
Internet: http://www.troxtechnik.com

Translation of the original
A00000074707, 1, GB/en
05/2019

1 Thermal insulation

1.1 Supply package

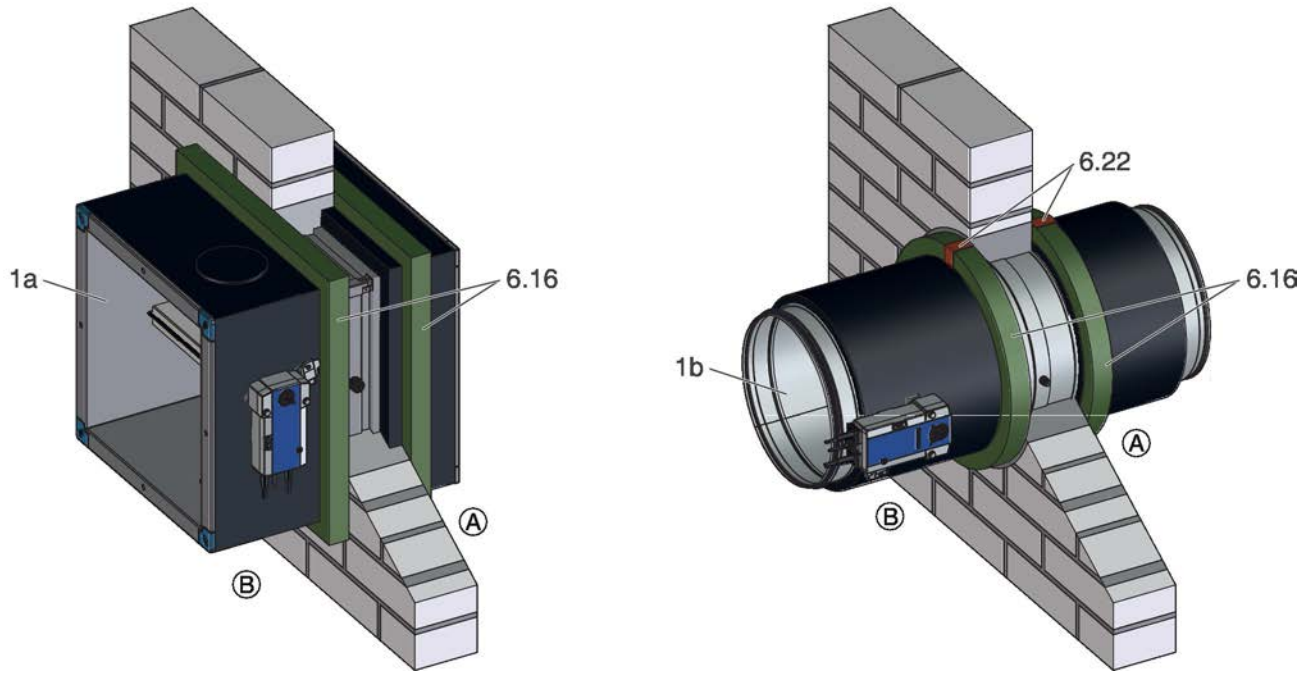

Fig. 1: Supply package FK-EU or FKR-EU with thermal insulation

1a	FK-EU with thermal insulation	6.22	Armaflex tape
1b	FKR-EU with thermal insulation	A	Installation side
6.16	Insulating strips, Armaflex AF / Armaflex Ultima, around the perimeter	B	Operating side

Supply package		
Item	**Name**	**Quantity**
1a or 1b	FK-EU or FKR-EU with thermal insulation	1
6.16	Insulating strips, Armaflex AF / Armaflex Ultima, around the perimeter	1 – 2 *
6.22	Armaflex tape	1 – 2 *

* depending on the wall thickness

1.2 Requirements

Tools

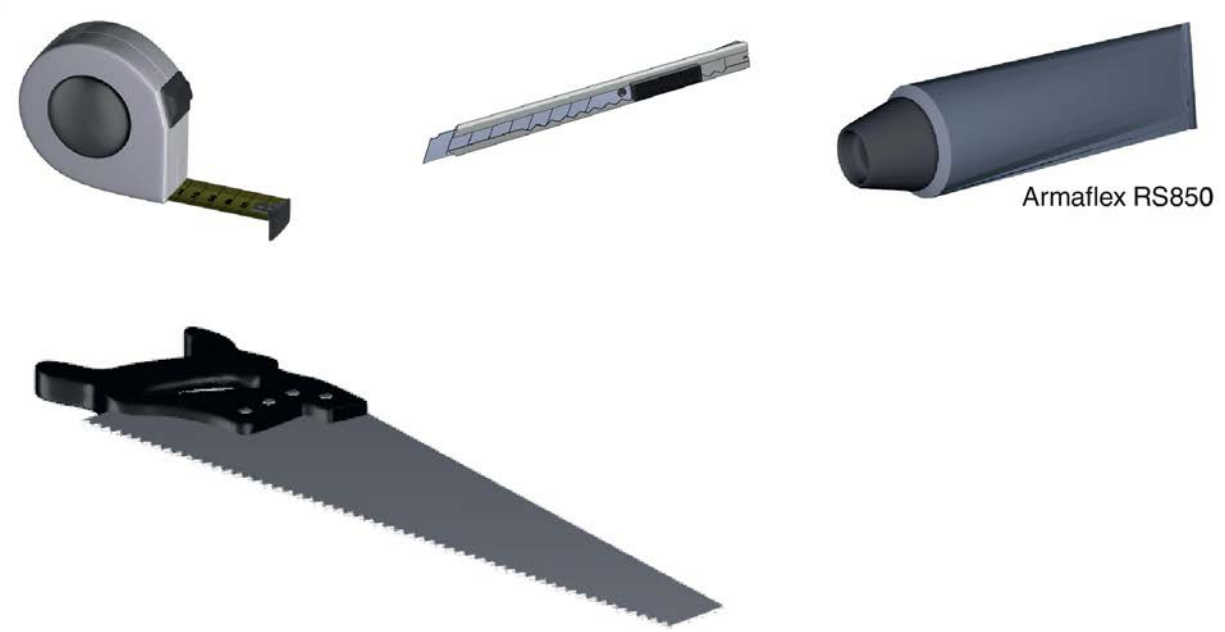

Fig. 2: Tools

Information on delivery

The thermal insulation provided ex-works comprises closed cell insulating material AF/Armaflex® (Armacell®). This flexible material has a thickness of 32 mm and is completely glued.

The insulating material is an elastomeric foam on a base of synthetic rubber. The surfaces of these materials have limited resistance against mechanical loads. Even when the insulating material is treated with care, there is a risk of contamination, pressure marks or surface damage during factory processing or transport. However, this shall not constitute justification for a complaint.

Deeper cuts and joints to insulating material that happen on site can be closed using suitable Armaflex® adhesive RS850 (Armacell®).

General installation information

- The actuators and thermal release unit are not covered in insulating material ex-works. If necessary, on site covers should be designed so that these areas remain accessible and the functioning of the fire damper is not affected.
- The fire damper flanges should be incorporated into the on-site duct insulation.
- Condensate in the area of the outside and exhaust air ducts can lead to damage to the products used or to the wall or ceiling slab. The fire dampers should therefore be incorporated into the on-site building measures for the condensate drainage.
- Be sure to comply with the relevant national guidelines and regulations for combustible building materials.
- The fire dampers must be protected against weather conditions. The use of external weather louvres in commercially available designs offer good protection against directly penetrating rain, but generally cannot prevent the entry of rainwater spray under certain conditions.

  This is dependent on:
  - Installation height
  - Wind direction
  - Rain intensity and angle of incidence

2 Installation

2.1 Installation of FK-EU

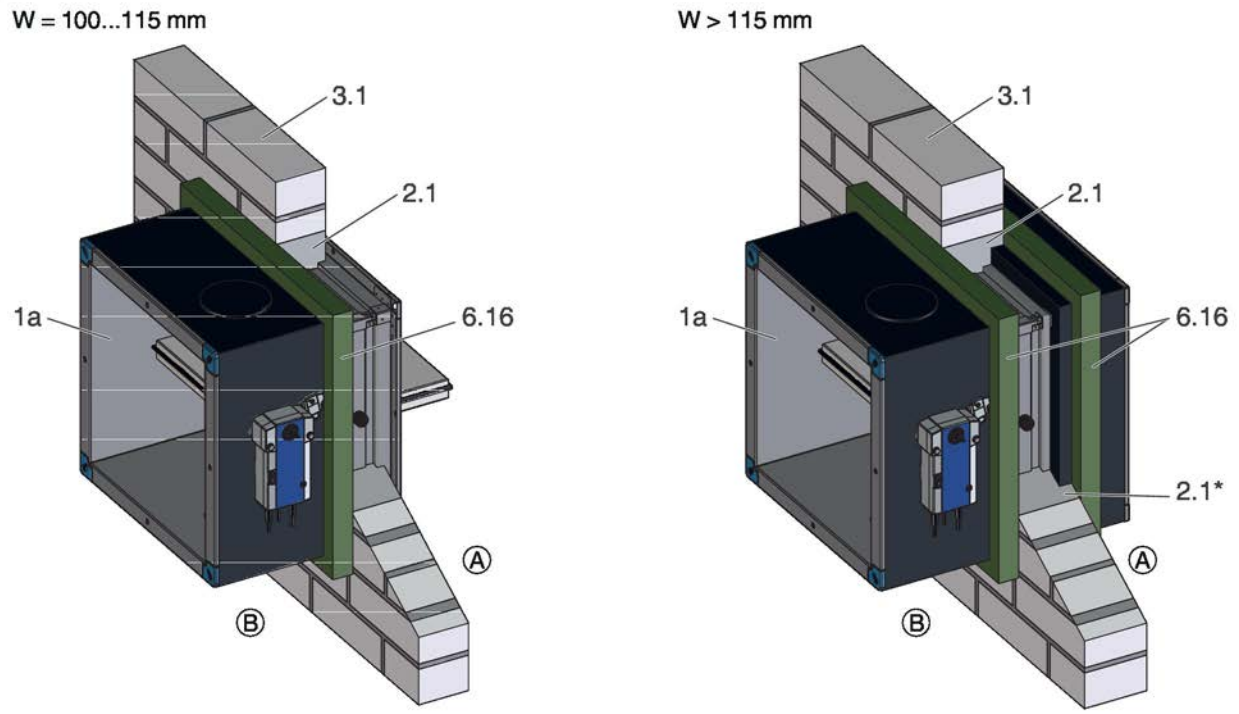

Fig. 3: FK-EU with thermal insulation

1a FK-EU
2.1 Mortar or gypsum mortar
3.1 Solid wall
6.16 Insulating strips, Armaflex AF / Armaflex Ultima, around the perimeter, actuator and release mechanism as well as inspection accesses must be accessible
A Installation side
B Operating side

Additional requirements

- Solid wall
- Casing length L = 305 or 500 mm
- Attach the insulating strips provided (6.16) on site and close off the overlaps with reverse adhesive coating. Depending on the local conditions, insulation for larger wall areas may be required. Insulation provided on site can be installed up to the insulated dire damper casing instead of using insulating strips.
- Install the insulation provided on site, e.g. for the ducting or the extension piece (9.2), without gaps.

* Mortar (2.1) over the insulation is permitted

Note:

These instructions supplement the installation and operating manual of the FK-EU. They show the installation of the FK-EU fire damper with thermal insulation in a solid wall. The installation situation shown is representative for all installation situations and support structures in accordance with the installation and operating manual FK-EU.

2.2 Installation of FKR-EU

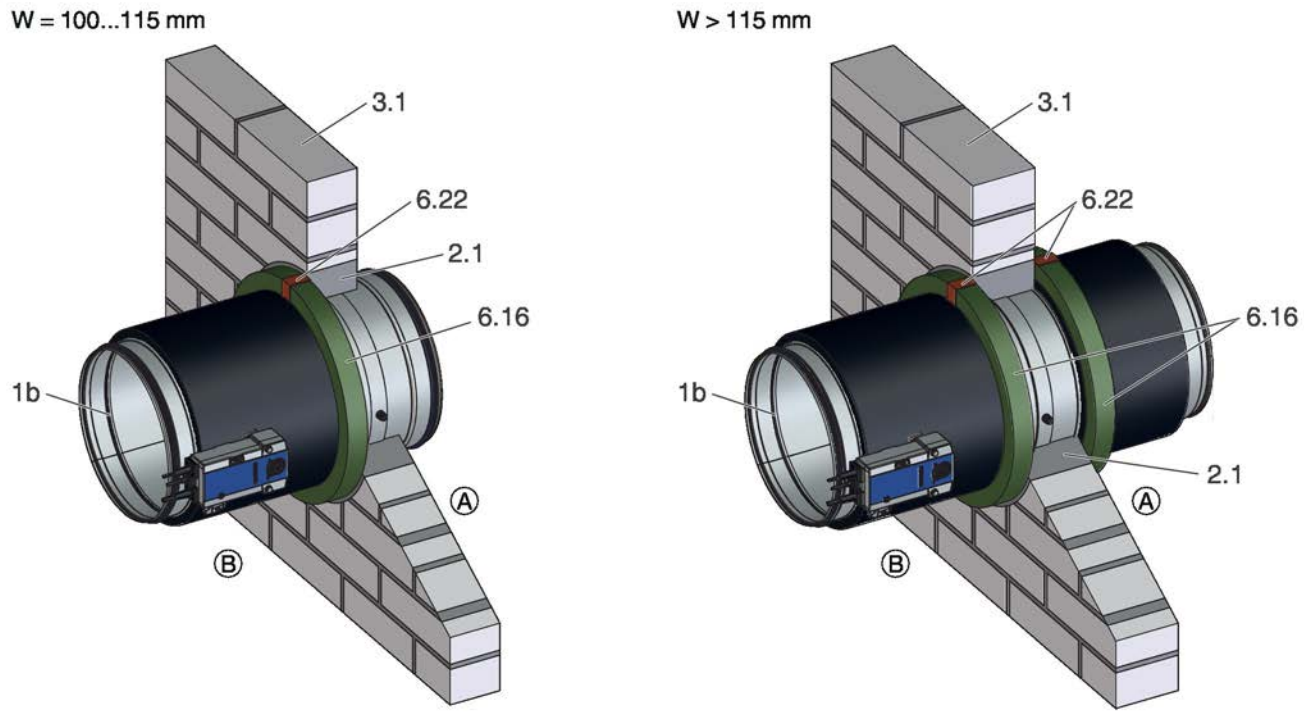

Fig. 4: FKR-EU with thermal insulation

1b	FKR-EU	6.22	Armaflex tape
2.1	Mortar or gypsum mortar	9.2	Extension piece or duct
3.1	Solid wall	A	Installation side
6.16	Insulating strips, Armaflex AF / Armaflex Ultima, around the perimeter, actuator and release mechanism as well as inspection accesses must be accessible	B	Operating side

Additional requirements

- Solid wall
- Casing length L = 495 or 550 mm
- Install the insulating strips (6.16) on site and close off the joint with Armaflex adhesive or with the Armaflex tape (6.22) provided.
  Depending on the local conditions, insulation for larger wall areas may be required. Insulation provided on site can be installed up to the insulated dire damper casing instead of using insulating strips.
- Install the insulation provided on site, e.g. for the ducting or the extension piece (9.2), without gaps.

Note:

This installation manual supplements the installation and operating manual of the FKR-EU. It shows the installation of the FKR-EU fire damper with thermal insulation in a solid wall. The installation situation shown is representative for all installation situations and support structures in accordance with the installation and operating manual FKR-EU.

3 Index

A
Armaflex adhesive..... 4
Armaflex tape..... 3
F
Fire damper..... 3
I
Installation side..... 3
Insulating strips..... 3
N
Nominal size..... 3
O
Operating side..... 3
S
Supply package..... 3
T
Thermal insulation..... 3